CUB811K

IEEE 802.11b/g/n WiFi-USB Dongle with an external SMA connector

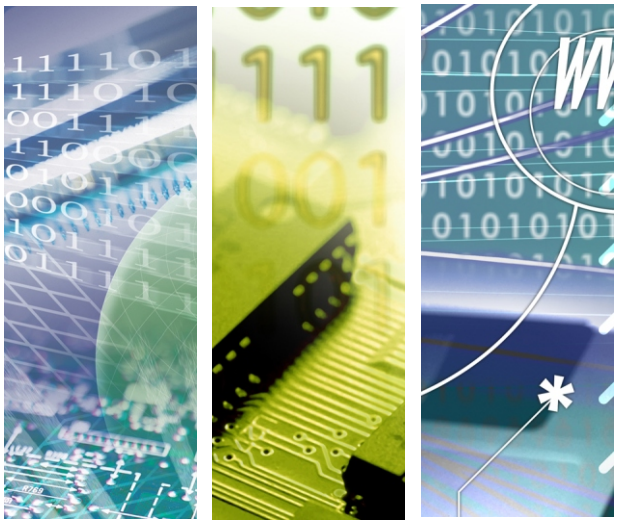

CUB811K

IEEE 802.11 b/g/n WiFi-USB Dongle with an external SMA connector

Introduction of Products

Taijet Bointec CUB811K is a cost-effective WLAN adapter based on an USB Type A connector. It supports USB 2.0 standard interface. The CUB811K adapter is designed to operate in 2.4GHz frequency and fully complies

with IEEE 802.11b/g and 802.11n standards based on 1T1R technology. Moreover, CUB811K provide an additional and external SMA connector in order to enhance the performance and coverage.

Taijet Bointec CUB811K is based on the MT7601U MAC/BBP, RF/PA/LNA single chip is used to deliver high-performance of the latest Wi-Fi technology, including software driver support for Windows 7, Vista 32/64, XP 32/64, 2000 and Linux.

Product Highlight

- 802.11b: 1, 2, 5.5, 11Mbps; 802.11g: 6, 9, 12, 24, 36, 48, 54 Mbps ; 802.11n: Support PHY rate up to 150Mbps.
- Support Soft-AP, QoS-WMM and WMM-PS
- Support WiFi Direct
- Security support for 64/128 WEP,WPA,WPA2,WAPI and WPS
- Multiple BSSID support
- RoHS Compliant

Specification:

Antennas	One rotatable antenna.
Operation Frequency	ISM band, 2412~2483.5MHz (Depends on country region)
Typical Transmit Power	802.11b (CCK) 11Mbps: 19+/-1dBm
	802.11g (OFDM) 54Mbps: 16+/-1dBm
	802.11n (HT20@MCS7), 16+/-1dBm, (HT40@MCS15), 15+/-1dBm
Receive Sensitivity (after antenna)	802.11b: -88+/-1dBm
	802.11g: -73+/-1dBm
	802.11n (HT20), -70+/-1dBm; 802.11n (HT40), -65+/-1dBm
Operation System	Windows XP/Vista/7 ; Linux 2.6.X
Security	WEP 64/128, WPA/WPA2 (TKIP, AES); WAPI;WPS
Voltage Range/Current	DC 5.0V±5% / <150mA@802.11g
Physical Specification	
Dimensions	30*13.8*9.6mm
Weight	14g
Temperature	
Operating Temperature	-10℃ to +60 ℃
Storage Temperature	-20℃ to +85 ℃
Humidity	
Operating Humidity Conditions	20% to 80% (non-condensing)
Non-Operating Humidity Conditions	20% to 80%

ME Drawing/placement

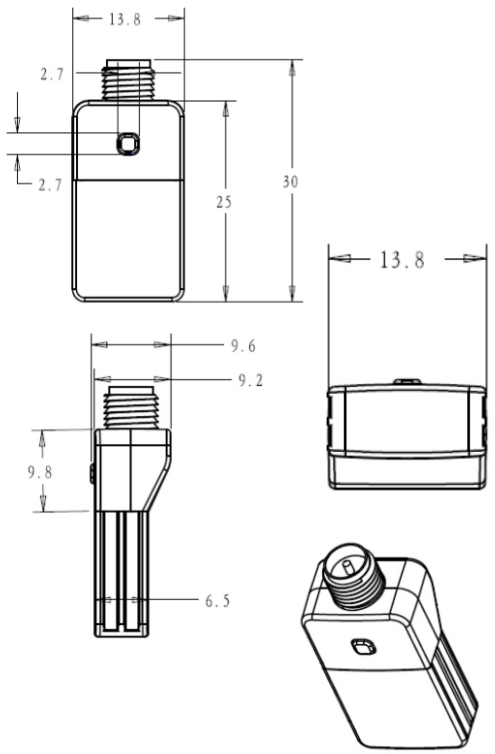

Applications

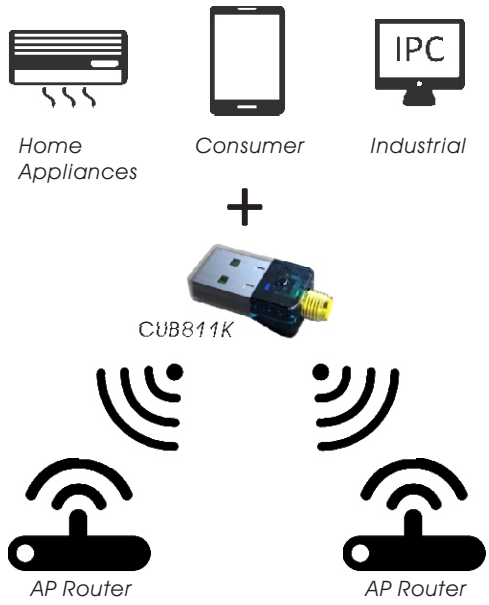

TAIJET BOINTEC CO LTD
4F, #114, Zhouzi St., Neihu-Taipei 11493, Taiwan
TEL:+886-2-2759-0081
WWW.BOINTEC.COM

Bointec Authorized Distributer

(C)TAIJET BOINTEC. All rights reserved. Taijet Bointec & the Taijet Bointec logo are the trademarks of Taijet Bointec, which may be registered in some jurisdictions.
All other brands and product names are registered trademarks of their respective holders. Information supplied by Taijet Bointec is believed to be accurate and reliable.
Taijet Bointec assumes no responsibility for any errors in this brochure. Taijet Bointec reserves the right, without notice, to make changed in product design or specifications.